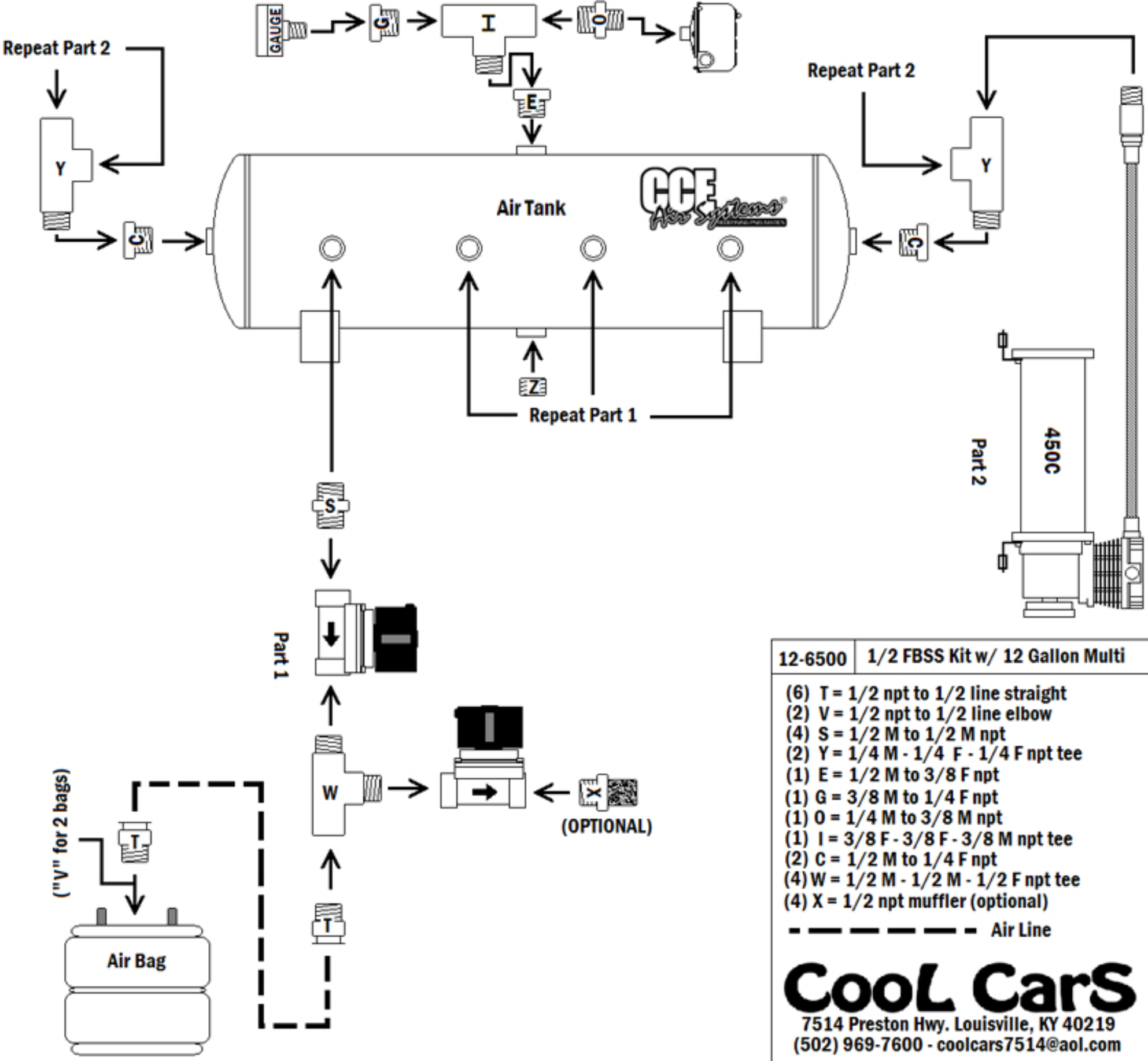


| 12-6500 | 1/2 FBSS Kit w/ 12 Gallon Multi |
|---|---|

(6) T = 1/2 npt to 1/2 line straight
(2) V = 1/2 npt to 1/2 line elbow
(4) S = 1/2 M to 1/2 M npt
(2) Y = 1/4 M - 1/4 F - 1/4 F npt tee
(1) E = 1/2 M to 3/8 F npt
(1) G = 3/8 M to 1/4 F npt
(1) O = 1/4 M to 3/8 M npt
(1) I = 3/8 F - 3/8 F - 3/8 M npt tee
(2) C = 1/2 M to 1/4 F npt
(4) W = 1/2 M - 1/2 M - 1/2 F npt tee
(4) X = 1/2 npt muffler (optional)

- - - - - Air Line


CooL CarS
7514 Preston Hwy. Louisville, KY 40219
(502) 969-7600 - coolcars7514@aol.com